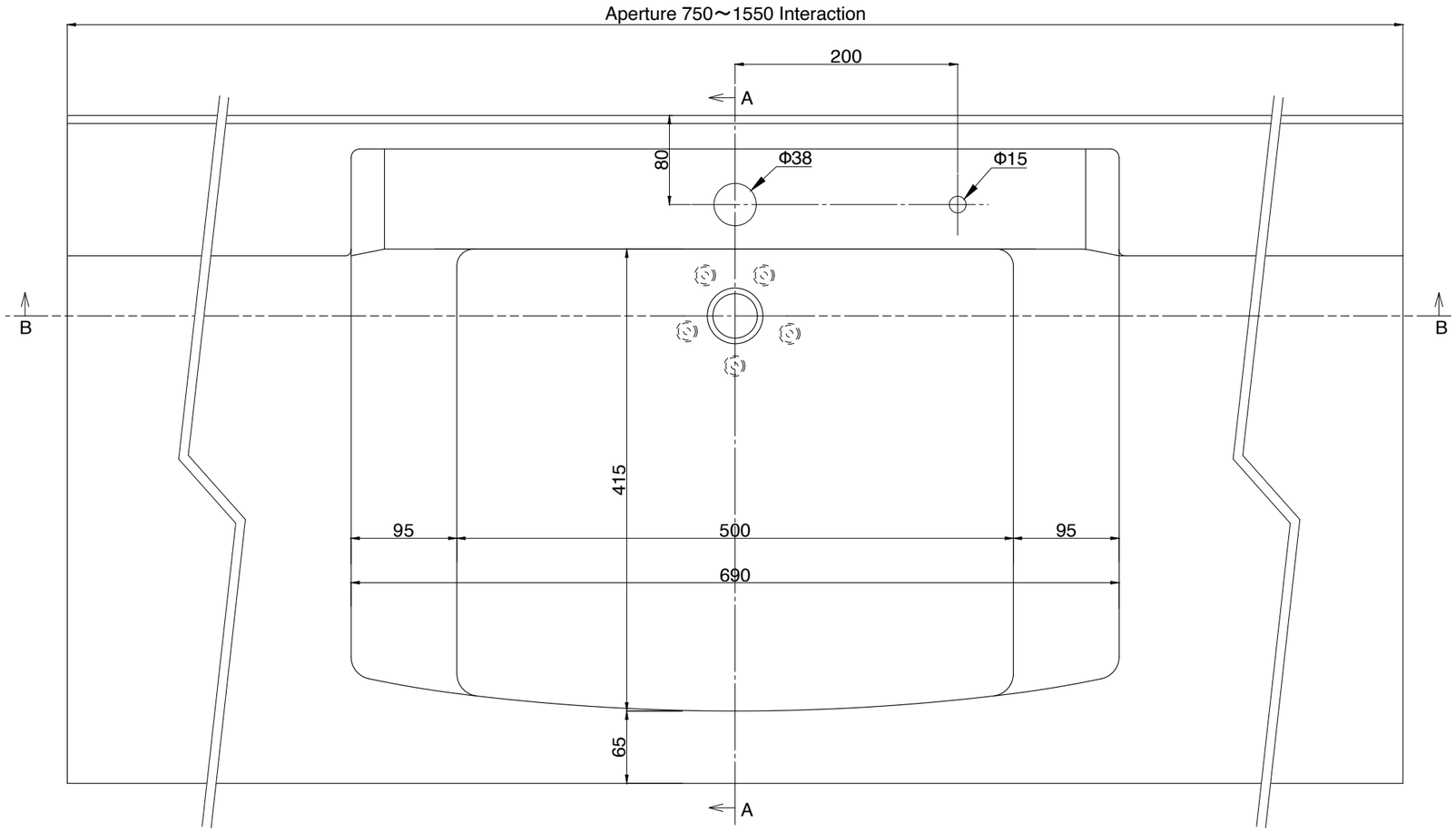

Section A - A

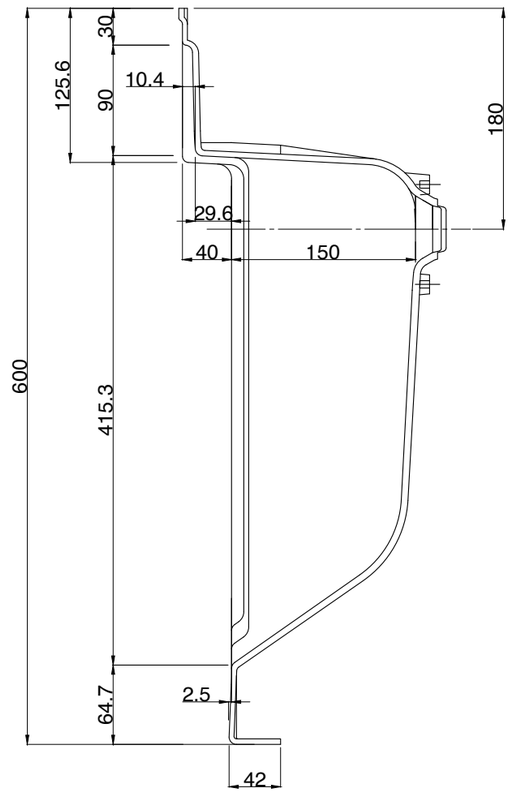

Section B - B

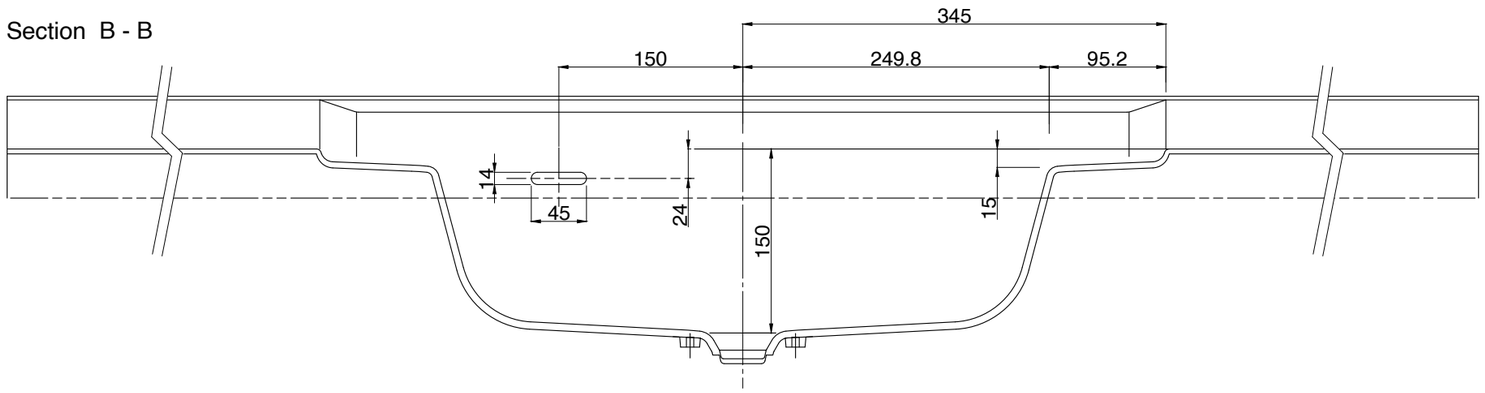

Notice:

-The hole for faucet diameter is possible to change.

TITLE	Washbasin Counter Product Drawing		
PRODUCT NAME	DL		
YOSHIMOTO global		SCALE	1/5
		DRAWING NUMBER	AC-2302211