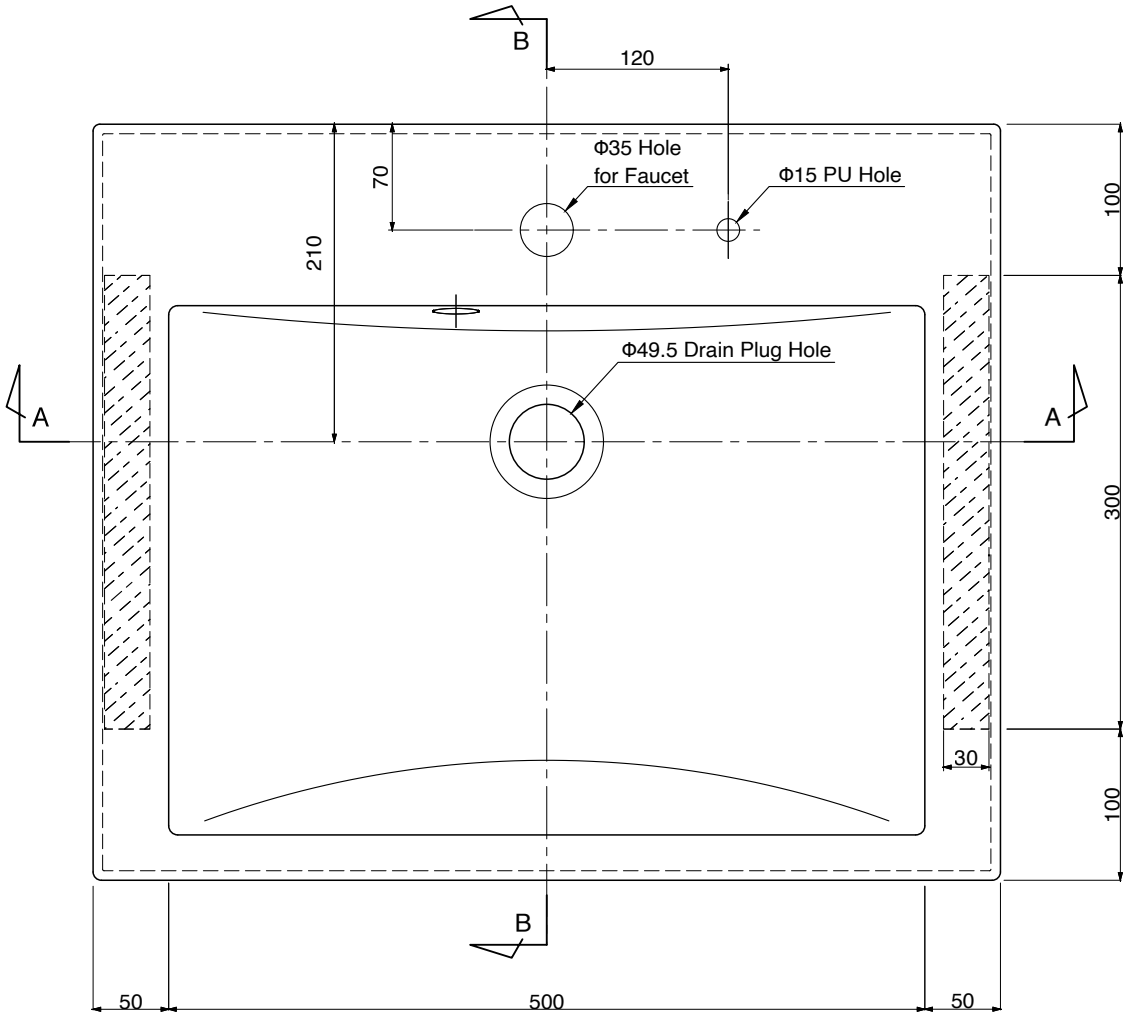

Section B-B

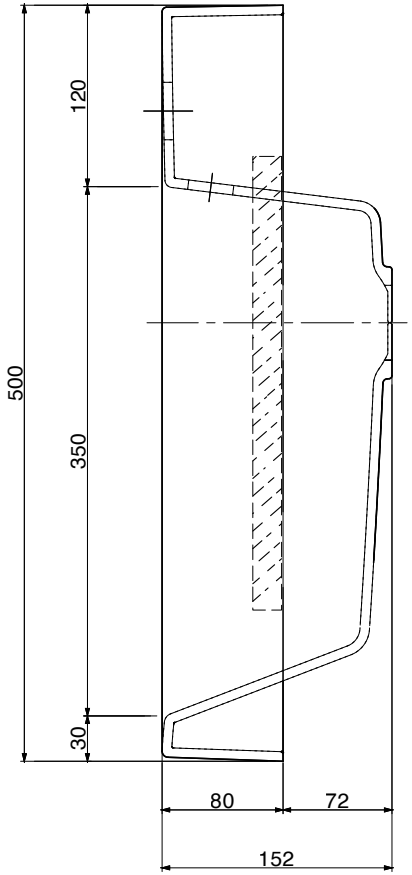

Section A-A

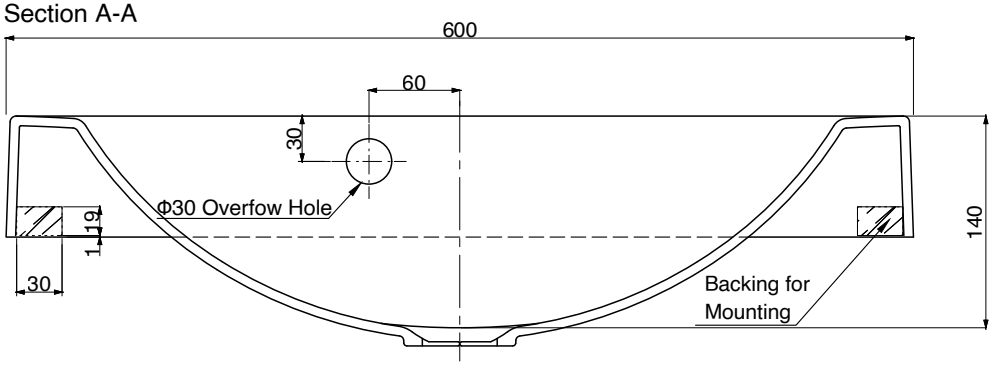

Notice:

-The hole for faucet diameter is possible to change.

TITLE	Washbasin Bowl Processing Drawing		
PRODUCT NAME	SQR-600-80H		
YOSHIMOTO global		SCALE	1/5
		DRAWING NUMBER	BHbP-2302061